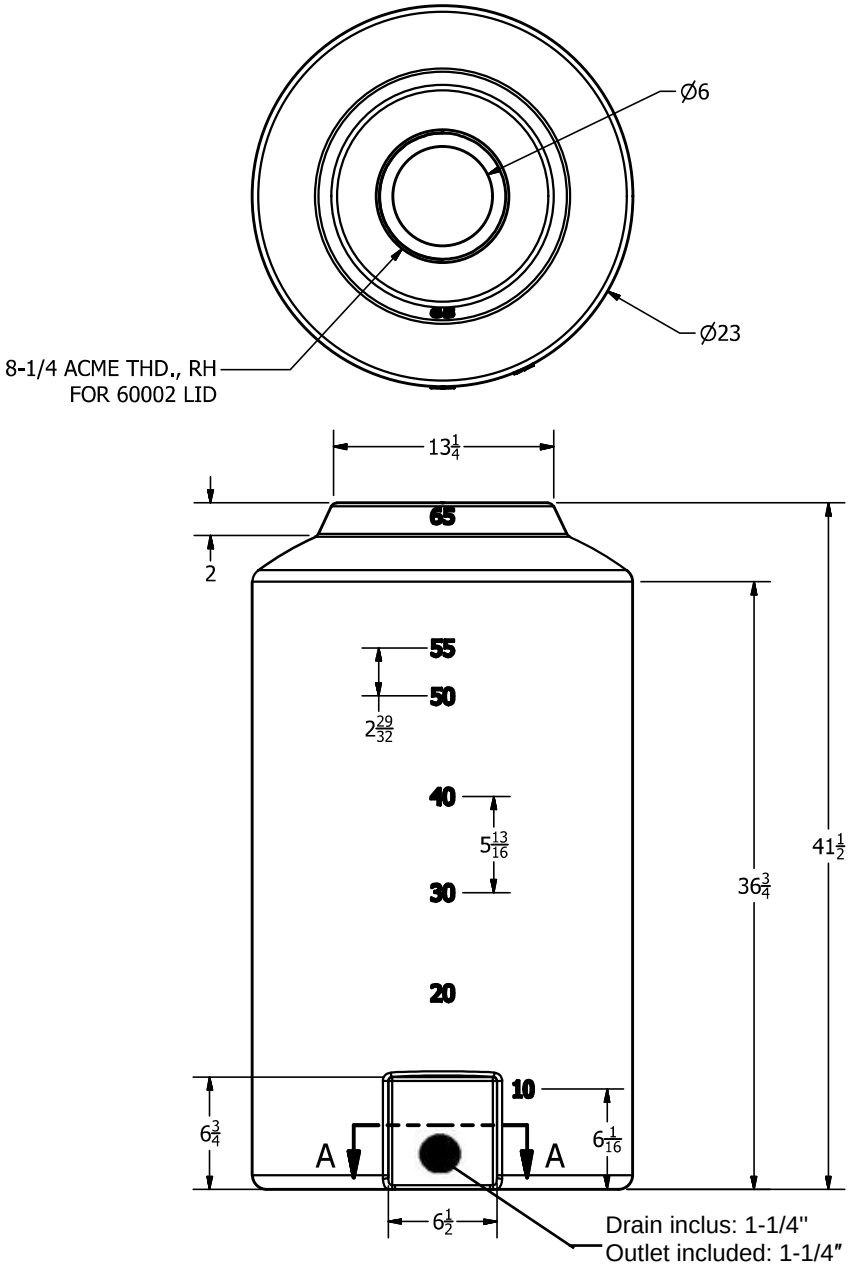

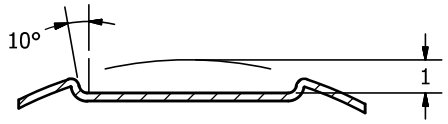

SECTION A-A
SCALE 1:4

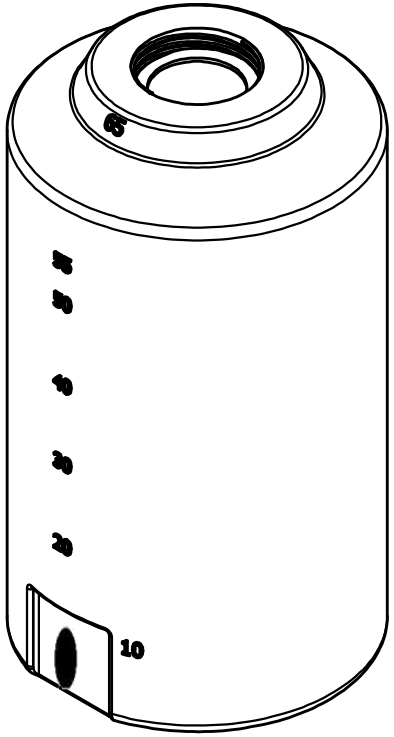

REVISION HISTORY			
REV	DESCRIPTION	DATE	AUTHOR
A	REVISED & REDRAWN	8/31/1995	
B	REDRAWN	7/1/2013	Michael Holden

DRAWN Jerry Paulson	8/31/1995	AGRICO PLASTIQUES 450-471-2772
CHECKED		TITLE
QA		65 GALLON VERTICAL STORAGE TANK
MFG		
APPROVED		SIZE B / DWG NO VFN45192 / REV B
		SCALE: 1/16 / SHEET 1 OF 1