RESERVOIR HORIZONTAL AUTOPORTANT DE 525 GALLONS US

WWW.AGRICOPLASTIQUES.COM

ZONE	REV	DESCRIPTION	DATE
	D	WAS 72 1/2	03DEC04

REVISIONS

ZONE	REV	DESCRIPTION	DATE	APPROVED
	C	REDRAWN	10FEB97	
	C1	CORRECTED, WAS 27-1/2	23SEP02	

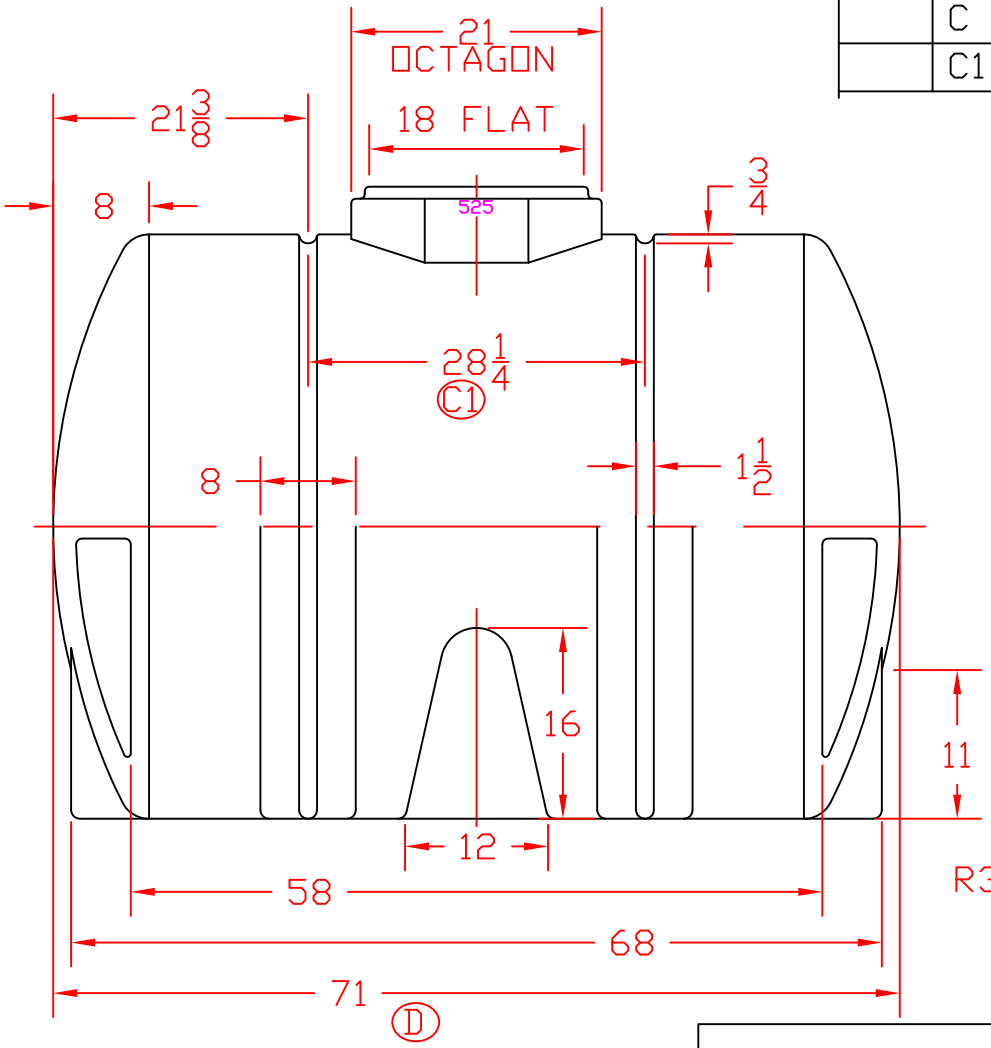

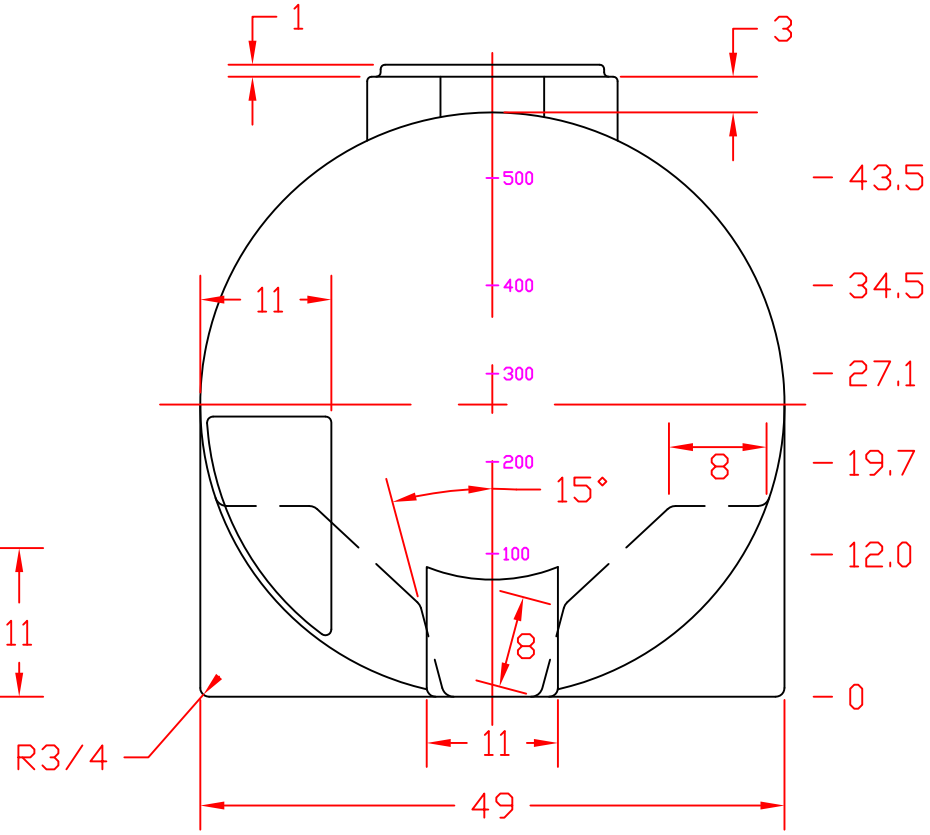

NOTE: GALLONAGE MARKS BOTH ENDS

HL40193

JTP 10FEB97

AGRICO PLASTIQUES
450-471-2772

525 GAL HORIZONTAL TANK

SIZE	FSCM NO.	DWG NO.	REV
A			D

SCALE 1/16 SHEET