CB080086

RÉSERVOIR CONIQUE FERMÉ DE 800 GALLONS US

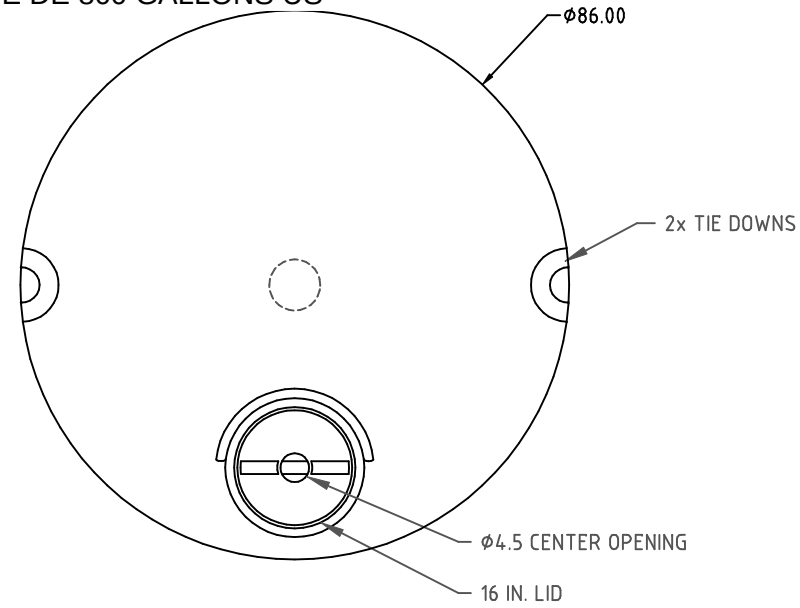

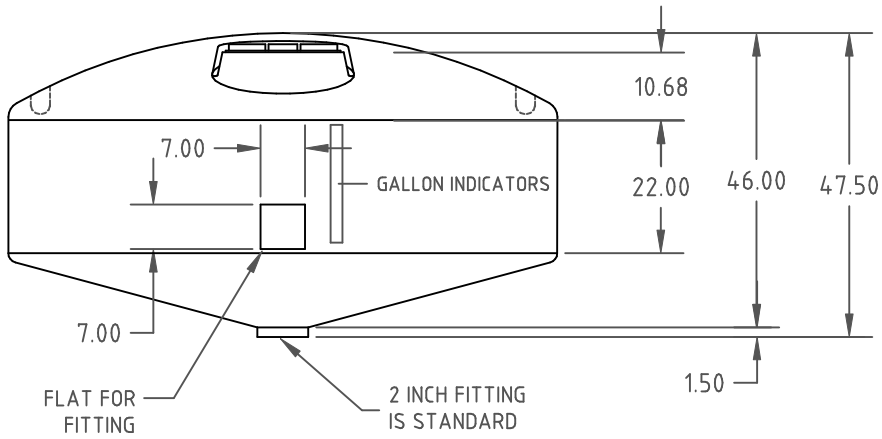

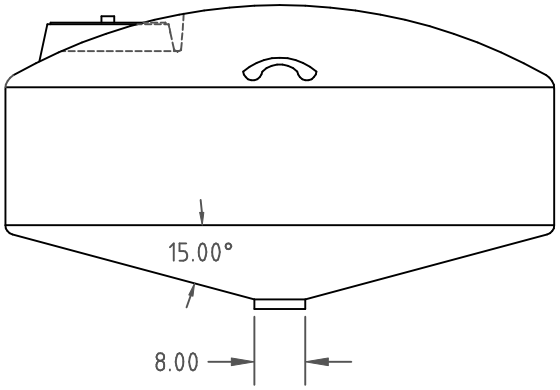

REV	DESCRIPTION	BY / DATE	CCN

ALL DIMENSIONS ARE IN DECIMAL INCHES
TOLERANCES UNLESS OTHERWISE SPECIFIED

POLYETHYLENE: ±1% @ 68° F

METAL: DECIMAL ± .125" FRACTION ± 1/4" ANGLE ± 1°

THIRD ANGLE PROJECTION ANSI 14.5M

DRAWN / DATE: DHJ 10/27/09

APPRD. / DATE: REH 11/2/09

SHOT WEIGHT: 180 LBS.

SHIPPING WEIGHT: 182 LBS.

FINISH:

MATERIAL: POLYETHYLENE

NOTES:
1. .25 WALL

AGRICO PLASTIQUES
450-471-2772
WWW.AGRICOPLASTIQUES.COM

DESCRIPTION: 800 GALLON X 86" CONE BOTTOM TANK

SCALE: N.S.

PART NO.: CB080086