RESERVOIR RECTANGULAIRE FERME DE 100 GALLONS US

WWW.AGRICOPLASTIQUES.COM

REVISIONS				
ZONE	REV	DESCRIPTION	DATE	APPROVED

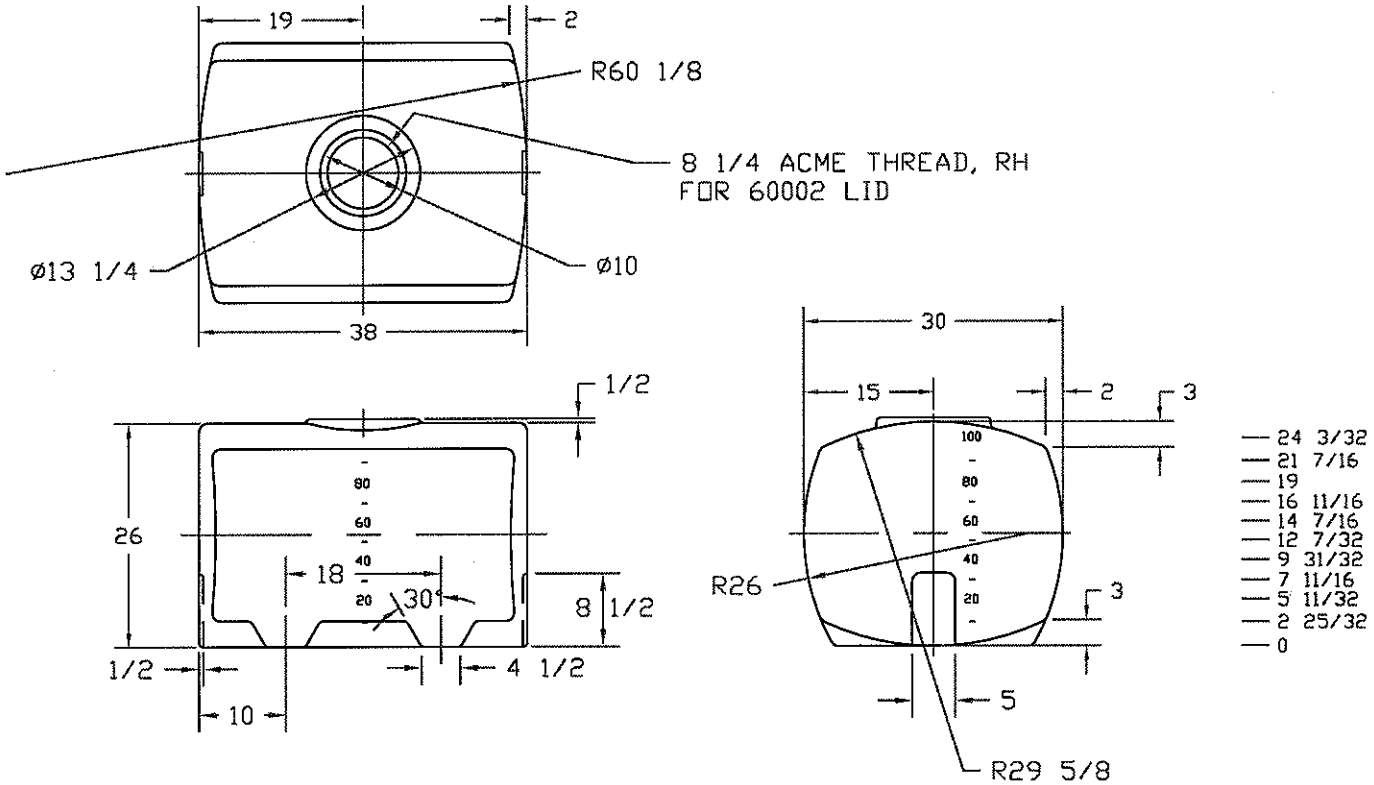

PCO40668	AGRICO PLASTIQUES 450-471-2772			
	100 GALLON PCO TANK			
JTP 30JUN95	SIZE B	FSCM NO.	DWG NO.	REV
	SCALE 1/16		SHEET	